B1 PH-306BA

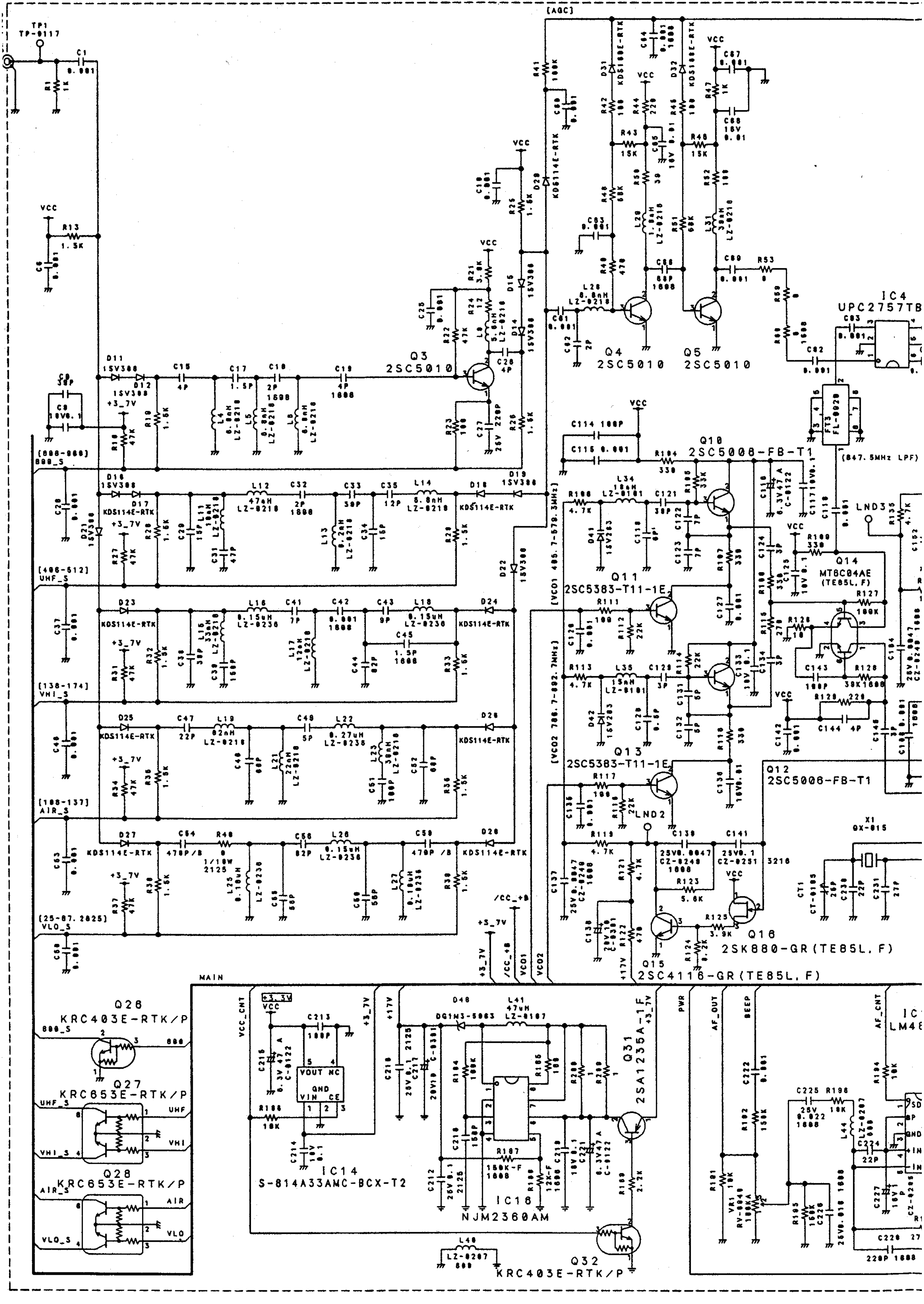
TP1
TP-0117
C1
0.001
R1
1K
VCC
R13
1.5K
C6
0.001
[AGC]
R41
100K
C60
0.001
D31
KDS180E-RTK
C64
0.001
1000
D32
KDS180E-RTK
VCC
C67
0.001
R47
1K
C68
16V
0.01
R42
100
R44
220
R46
100
R43
15K
C65
16V
0.01
R48
15K
R48
68K
R50
39
R52
100
L29
1.0uH
LZ-0218
R51
68K
L31
39nH
LZ-0218
C63
0.001
R49
470
C66
68P
1608
C69
0.001
R53
0
L28
6.8nH
LZ-0218
C61
0.001
C62
2P
Q4
2SC5010
Q5
2SC5010
R59
0
R60
1000
IC4
UPC2757TB
C83
0.001
C82
0.001
FT3
FL-0020
(847.5MHz LPF)
VCC
C18
0.001
D20
KDS114E-RTK
R25
1.5K
D15
1SV308
D14
1SV308
VCC
R21
3.9K
R24
12
L9
5.6nH
LZ-0218
C25
0.001
R22
47K
C26
4P
Q3
2SC5010
C27
25V 220P
R23
100
R26
1.5K
C9
39P
C8
10V0.1
D11
1SV308
D12
1SV308
+3_7V
R18
47K
R19
1.5K
C15
4P
C17
1.5P
C18
2P
1608
C19
4P
1608
L4
6.8nH
LZ-0218
L5
6.8nH
LZ-0218
L6
6.8nH
LZ-0218
[800-960]
800_S
C20
0.001
D16
1SV308
D17
KDS114E-RTK
D21
1SV308
+3_7V
R27
47K
R28
1.5K
C29
15P
L11
33nH
LZ-0218
C31
47P
L12
47nH
LZ-0218
C32
2P
1608
C33
39P
C35
12P
L14
5.6nH
LZ-0218
L13
8.2nH
LZ-0218
C34
16P
D18
KDS114E-RTK
D19
1SV308
R29
1.5K
D22
1SV308
[406-512]
UHF_S
C37
0.001
D23
KDS114E-RTK
+3_7V
R31
47K
R32
1.5K
C38
39P
L15
33nH
LZ-0218
C39
150P
L16
0.15uH
LZ-0236
C41
7P
C42
0.001
1608
C43
9P
L18
0.15uH
LZ-0236
D24
KDS114E-RTK
L17
12nH
LZ-0218
C44
82P
C45
1.5P
1608
R33
1.5K
[136-174]
VHI_S
C46
0.001
D25
KDS114E-RTK
C47
22P
L19
LZ-0218
C49
5P
L22
0.27uH
LZ-0236
D26
KDS114E-RTK
+3_7V
R34
47K
R35
1.5K
C48
68P
L21
22nH
LZ-0218
L23
39nH
LZ-0218
C51
100P
C52
68P
R36
1.5K
[108-137]
AIR_S
C53
0.001
D27
KDS114E-RTK
C54
470P/B
R40
0
1/10W
2125
C56
82P
L26
0.15uH
LZ-0236
C58
470P/B
D28
KDS114E-RTK
+3_7V
R37
47K
R39
1.5K
L25
0.10uH
LZ-0236
C55
68P
C59
56P
L27
0.10uH
LZ-0236
R38
1.5K
[25-87.2025]
VLO_S
C50
0.001
+3_7V
/CC_+B
VCO1
VCO2
VCC
C114 100P
C115 0.001
R104
330
Q10
2SC5008-FB-T1
R105
33K
C116
6.3V47A
C-0122
C117
10V0.1
C118
0.001
R106
4.7K
L34
18nH
LZ-0181
C121
39P
C122
7P
D41
1SV283
C119
6P
C123
7P
R107
330
[VCO1 485.7-579.3MHz]
Q11
2SC5383-T11-1E
R111
100
C126
0.001
R112
22K
C127
0.001
LND35
VCC
R109
330
R135
4.7K
C124
3P
R108
330
C125
10V 0.1
Q14
MT6C04AE
(TE85L, F)
R127
100K
R115
270
R126
10
C134
3P
C133
10V 0.1
R114
22K
R113
4.7K
L35
15nH
LZ-0181
C129
3P
C131
5P
D42
1SV283
C130
0.5P
C132
5P
[VCO2 786.7-892.7MHz]
C143
100P
R128
39K1000
C104
25V 0.0047
CZ-0240 1608
VCC
R129
220
C142
0.001
C144 4P
C145
3P
R116
330
Q13
2SC5383-T11-1E
R117
100
C135
0.001
R118
22K
C136
16V0.01
Q12
2SC5006-FB-T1
LND2
R119
4.7K
C138
25V0.0047
CZ-0240
1608
C141
25V0.1
CZ-0251
3216
X1
OX-015
C137
25V0.0047
CZ-0240
1608
R121
4.7K
R123
5.6K
VCC
CT1
CT-0105
26P
22P
C231
27P
C139
R122
470
R125
3.9K
Q16
2SK880-GR(TE85L, F)
R124
8.2K
+17V
Q15
2SC4116-GR(TE85L, F)
+3_7V
MAIN
Q26
KRC403E-RTK/P
800_S
800
Q27
KRC653E-RTK/P
UHF_S
UHF
VHI_S
VHI
Q28
KRC653E-RTK/P
AIR_S
AIR
VLO_S
VLO
VCC_CNT
+3.3V
VCC
C213
100P
+3_7V
C215
6.3V 47 A
C-0122
VOUT NC
GND
VIN CE
R186
10K
C214
10V
0.1
IC14
S-814A33AMC-BCX-T2
+17V
D48
DG1N3-5063
L41
47uH
LZ-0107
C216
25V0.1 2125
C217
C-0381
20V10
R184
100K
R185
100
R200
R201
C218
150P
C212
25V0.1
2125
R187
150K-F
1608
R188
12K-F
1608
C219
10V0.1
C221
6.3V47A
C-0122
IC16
NJM2360AM
Q31
2SA1235A-1F
+3_7V
R189
2.2K
Q32
KRC403E-RTK/P
L40
LZ-0207
800
PWR
AF_OUT
BEEP
C222
0.001
R192
150K
R191
10K
VR1
RV-0040
100KA
C225
25V
0.022
1608
R198
10K
R195
150K
C226
25V0.010 1608
L44
LZ-0207
800
C224
22P
C227
10V1
CZ-0205
C228
220P 1608
AF_CNT
R194
10K
IC
LM48
SD
BP
GND
+IN
-IN

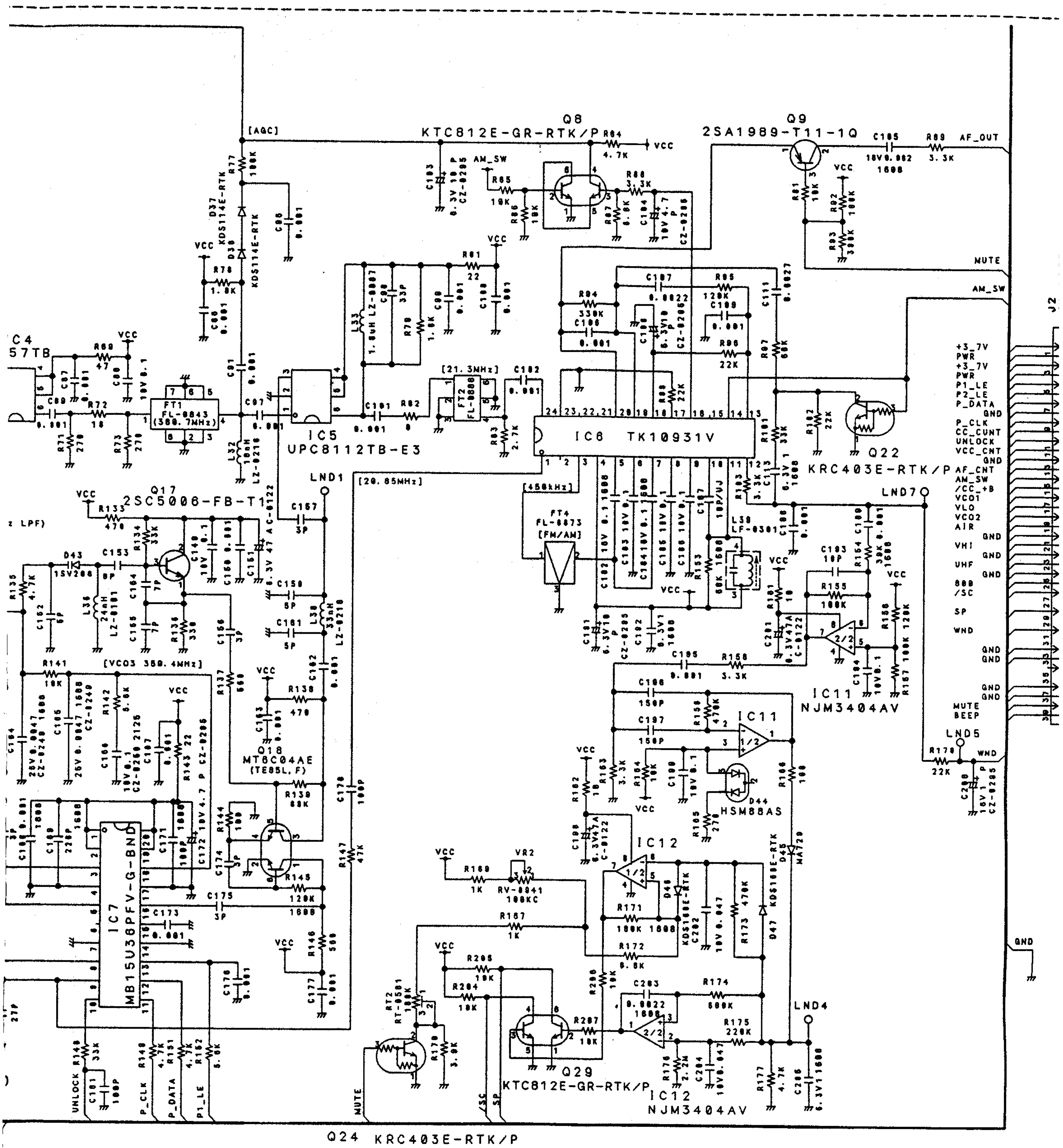

Q8 KTC812E-GR-RTK/P
Q9 2SA1989-T11-1Q
[AGC]
AM_SW
VCC
AF_OUT
MUTE
R84 4.7K
C185 10V0.082 1608
R89 3.3K
D37 KDS114E-RTK
D38 KDS114E-RTK
R77 100K
C4 57TB
FT1 FL-0843 (380.7MHz)
IC5 UPC8112TB-E3
L33 1.0uH LZ-0087
FT2 FL-0888 [21.3MHz]
IC6 TK10931V
[20.85MHz]
[450kHz]
FT4 FL-0873 (FM/AM)
L39 LF-0301
LND1
LND7
LND5
LND4
Q22 KRC403E-RTK/P
Q17 2SC5006-FB-T1
D43 1SV286
L36 24nH LZ-0181
L38 33nH LZ-0218
L32 10nH LZ-0218
[VCO3 380.4MHz]
Q18 MT6C04AE (TE85L,F)
IC7 MB15U36PFV-G-BND
IC11 NJM3404AV
IC12 NJM3404AV
D44 HSM88AS
VR2 RV-0941 100KC
RT2 RT-0581
Q29 KTC812E-GR-RTK/P
Q24 KRC403E-RTK/P
D45 MA729
D46 KDS160E-RTK
D47 KDS160E-RTK
UNLOCK
P_CLK
P_DATA
P1_LE
/SC
SP
J2
+3_7V
PWR
+3_7V
PWR
P1_LE
P2_LE
P_DATA
GND
P_CLK
CC_CNT
UNLOCK
VCC_CNT
GND
AF_CNT
AM_SW
/CC_+B
VCO1
VLO
VCO2
AIR
GND
VHI
GND
UHF
GND
800
/SC
SP
WND
GND
GND
GND
GND
MUTE
BEEP
WND
GND

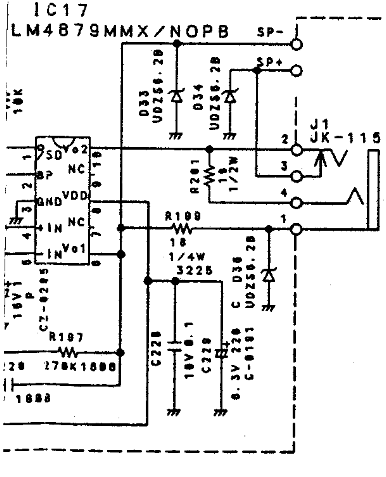

IC17 LM4879MMX/NOPB
SP-
SP+
J1 JK-1156
D33 UDZS6.2B
D34 UDZS6.2B
D36 UDZS6.2B
R201 10 1/2W
R199 10 1/4W 3225
R197 270K1608
SD
BP
GND
+IN
IN
Vo2
NC
VDD
NC
Vo1

NOTES: 1. RESISTANCE VALUES ARE SHOWN IN OHMS UNLESS OTHERWISE NOTED. (K=KILO OHM, M=MEG OHM)
2. RESISTOR WATTAGES ARE 1/16W [1005] UNLESS OTHERWISE NOTED.
3. CAPACITANCE VALUES ARE INDICATED IN MICRO FARADS UNLESS OTHERWISE NOTED. (P=MICRO-MICRO FARAD)
4. ALL CAPACITORS TEMPERATURE CHARACTERISTICS ARE [CH] (LESS THAN 1000PF) OR [B] (MORE THAN 1000PF) UNLESS OTHERWISE NOTED.
5. CHIP CAPACITORS TYPE ARE [1005] AND RATED 50V UNLESS OTHERWISE NOTED.
6. RESISTOR TOLERANCES ARE J UNLESS OTHERWISE NOTED.

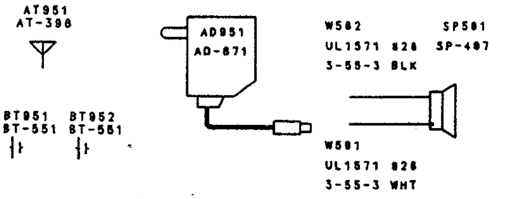

AT951 AT-398
AD951 AD-871
BT951 BT-551
BT952 BT-551
W502 UL1571 #28 3-55-3 BLK
SP501 SP-407
W501 UL1571 #28 3-55-3 WHT

DESIGN	DRAWN.BY	UNIDEN No.	MODEL No.
'04/11/08	'04/11/10	UB324C	AE92H
KUROKI	KUROKI	TITLE MAIN ASS'Y SCHEMATIC DIAGRAM	
CHECK.BY	APPRO.BY		
		DRAWING No.	
REV. No		UNIDEN CORP.	

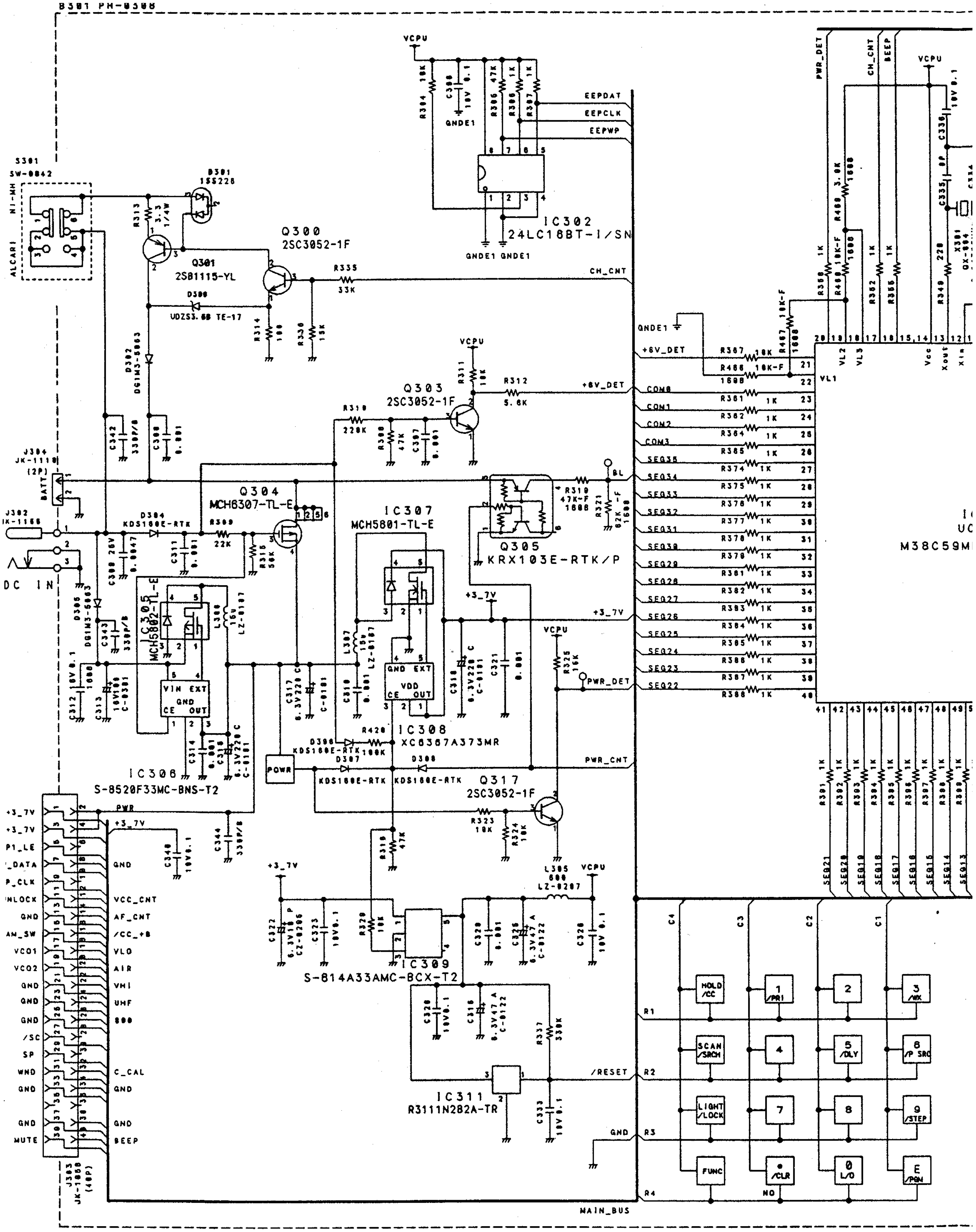

B301 PH-0508
S301
SW-0842
NI-MH
ALCARI
D301
1SS226
R313
3.3
1/4W
Q300
2SC3052-1F
Q301
2SB1115-YL
D300
UDZS3.6B TE-17
R314
100
R335
33K
R336
15K
D302
DG1M3-5063
C342
330P/B
C308
0.001
J304
JK-1110
(2P)
BATT
J302
JK-1166
DC IN
D304
KDS160E-RTK
C309 25V 0.0047
C311 0.001
R309 22K
R315 56K
Q304
MCH6307-TL-E
D305
DG1M3-5063
C343
330P/B
C312 16V 0.1 1608
C313 10V100 C-0301
IC305
MCH5802-TL-E
L300 15u LZ-0187
VIN EXT
GND
CE OUT
C314 0.001
C315 6.3V220 C C-0101
IC306
S-8520F33MC-BNS-T2
VCPU
R304 10K
C300 16V 0.1
GNDE1
R305 47K
R306 1K
R307 1K
EEPDAT
EEPCLK
EEPWP
IC302
24LC16BT-I/SN
GNDE1 GNDE1
CH_CNT
Q303
2SC3052-1F
R311 10K
R312 5.6K
+6V_DET
R310 220K
R300 47K
C307 0.001
IC307
MCH5801-TL-E
L307 15u LZ-0187
C317 6.3V220 C C-0101
C310 0.001
GND EXT
VDD
CE OUT
C318 6.3V220 C C-0101
C321 0.001
+3_7V
IC308
XC6367A373MR
R420 100K
D306 KDS160E-RTK
D307 KDS160E-RTK
D308 KDS160E-RTK
POWR
PWR_CNT
Q305
KRX103E-RTK/P
R319 47K-F 1608
R321 82K-F 1608
BL
R325 10K
PWR_DET
Q317
2SC3052-1F
R323 10K
R324 10K
R318 47K
C344 330P/B
C340 10V0.1
+3_7V
C322 6.3V10 P CZ-0206
C323 16V0.1
R320 10K
IC309
S-814A33AMC-BCX-T2
L305 600 LZ-0207
C320 0.001
C326 6.3V47 A C-0122
C328 10V 0.1
C329 10V0.1
C316 6.3V47 A C-0122
R337 330K
IC311
R3111N282A-TR
C333 16V 0.1
/RESET
GND
MAIN_BUS
J303
JK-1050
(40P)
+3_7V
+3_7V
P1_LE
_DATA
P_CLK
UNLOCK
GND
AN_SW
VCO1
VCO2
GND
GND
GND
/SC
SP
WND
GND
GND
MUTE
PWR
+3_7V
GND
VCC_CNT
AF_CNT
/CC_+B
VLO
AIR
VHI
UHF
800
C_CAL
GND
GND
BEEP
PWR_DET
CH_CNT
BEEP
VCPU
C336 16V 0.1
C335 8P
X301
R348 3.9K
R400 1608
R358 1K
R401 10K-F 1608
R362 1K
R366 1K
R349 220
GNDE1
R407 10K-F 1608
R367 10K
R408 10K-F 1608
+6V_DET
VL1
VL2
VL3
Vcc
Xout
Xin
COM0
COM1
COM2
COM3
SEG35
SEG34
SEG33
SEG32
SEG31
SEG30
SEG29
SEG28
SEG27
SEG26
SEG25
SEG24
SEG23
SEG22
R361 1K
R362 1K
R364 1K
R365 1K
R374 1K
R375 1K
R376 1K
R377 1K
R378 1K
R379 1K
R381 1K
R382 1K
R383 1K
R384 1K
R385 1K
R386 1K
R387 1K
R388 1K
UC
M38C59M
R391 1K
R392 1K
R393 1K
R394 1K
R395 1K
R396 1K
R397 1K
R398 1K
R399 1K
SEG21
SEG20
SEG19
SEG18
SEG17
SEG16
SEG15
SEG14
SEG13
C4
C3
C2
C1
R1
R2
R3
R4
HOLD /CC
1 /PRI
2
3 /WX
SCAN /SRCH
4
5 /DLY
6 /P SRC
LIGHT /LOCK
7
8
9 /STEP
FUNC
• /CLR
0 L/O
E /PGM
NO

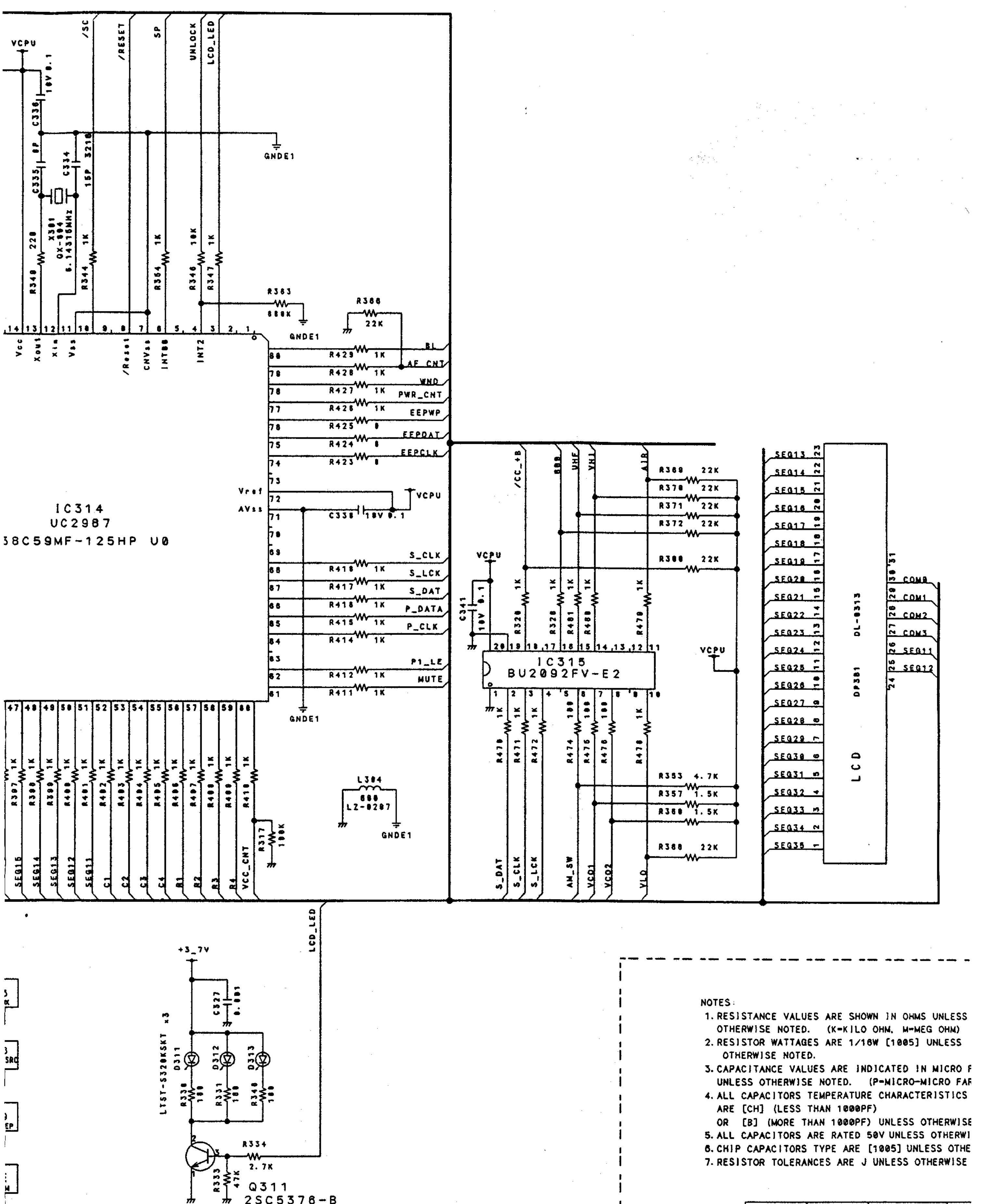
VCPU
/SC
/RESET
SP
UNLOCK
LCD_LED
C336 10V 0.1
GNDE1
C335 8P
C334 15P 3210
X301 OX-004 6.14315MHz
R340 220
R344 1K
R354 1K
R346 10K
R347 1K
R363 680K
R366 22K
Vcc Xout Xin Vss /Reset CNVss INT00 INT2
IC314
UC2987
38C59MF-125HP U0
R429 1K BL
R428 1K AF_CNT
R427 1K WND
PWR_CNT
R426 1K EEPWP
R425 0 EEPDAT
R424 0 EEPCLK
R423 0
Vref
AVss
C338 10V 0.1
R418 1K S_CLK
R417 1K S_LCK
R416 1K S_DAT
R415 1K P_DATA
R414 1K P_CLK
P1_LE
R412 1K MUTE
R411 1K
R307 R308 R309 R400 R401 R402 R403 R404 R405 R406 R407 R408 R409 R410 1K
R317 100K
SEG15 SEG14 SEG13 SEG12 SEG11 C1 C2 C3 C4 R1 R2 R3 R4 VCC_CNT
L304 600 LZ-0207
/CC_+B
800
UHF
VHI
AIR
C341 10V 0.1
R320 R328 R481 R480 R479 1K
R369 22K
R370 22K
R371 22K
R372 22K
R380 22K
IC315
BU2092FV-E2
R470 R471 R472 1K
R474 R475 R476 100
R478 1K
R353 4.7K
R357 1.5K
R360 1.5K
R368 22K
S_DAT S_CLK S_LCK AM_SW VCO1 VCO2 VLO
SEG13 SEG14 SEG15 SEG16 SEG17 SEG18 SEG19 SEG20 SEG21 SEG22 SEG23 SEG24 SEG25 SEG26 SEG27 SEG28 SEG29 SEG30 SEG31 SEG32 SEG33 SEG34 SEG35
COM0 COM1 COM2 COM3 SEG11 SEG12
DL-0313
DP381
LCD
LCD_LED
+3_7V
C327 0.001
LTST-S320KSKT x3
D311 D312 D313
R330 100
R331 100
R340 100
R334 2.7K
R333 47K
Q311
2SC5376-B

NOTES:

1. RESISTANCE VALUES ARE SHOWN IN OHMS UNLESS OTHERWISE NOTED. (K=KILO OHM, M=MEG OHM)
2. RESISTOR WATTAGES ARE 1/16W [1005] UNLESS OTHERWISE NOTED.
3. CAPACITANCE VALUES ARE INDICATED IN MICRO F UNLESS OTHERWISE NOTED. (P=MICRO-MICRO FAR
4. ALL CAPACITORS TEMPERATURE CHARACTERISTICS ARE [CH] (LESS THAN 1000PF) OR [B] (MORE THAN 1000PF) UNLESS OTHERWISE
5. ALL CAPACITORS ARE RATED 50V UNLESS OTHERWI
6. CHIP CAPACITORS TYPE ARE [1005] UNLESS OTHE
7. RESISTOR TOLERANCES ARE J UNLESS OTHERWISE

DESIGN	DRAWN.BY	UNIDEN No.	MOD
'04/11/6	'04/11/18	UB324C	AE
KUROKI	KUROKI	TITLE KEY AS SCHEMATIC I	
CHECK.BY	APPRO.BY	DRAWING No.	
REV.No		UNIDEN CO	